SCALE 1 : 10

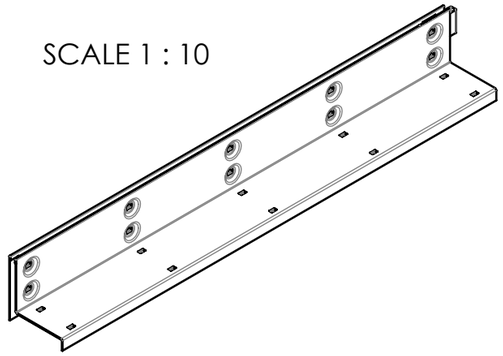

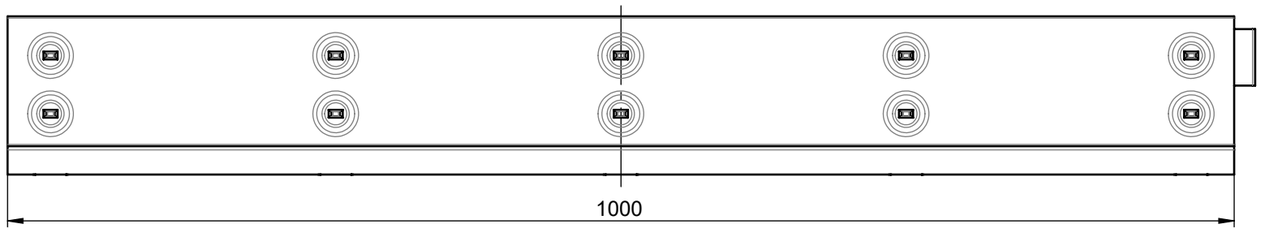

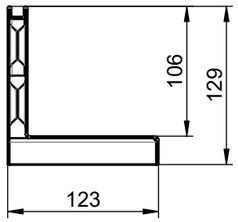

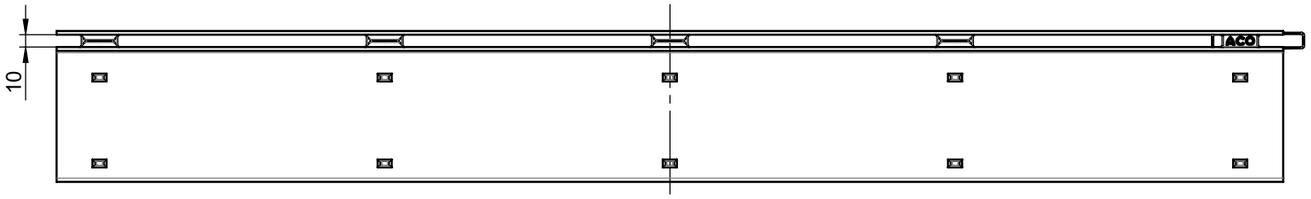

local article number: 445600

ACO Severin Ahlmann
GmbH & Co. KG
24755 Rendsburg, Postfach 320
Tel. +49 4331 354-0
Email: development@aco.com
www.aco.com

created by: rbhatia	reviewed by: rbhatia	drawing-no.: **1013321-M**	index: **002**
		documenttype: marketing drw.	projection:ISO-E / scale: 1:5

title:

Brickslot

SlotTop V100 H105 C250 single slot 10mm L1m, stainless steel

Schlitzrahmen V100 H105 C250 Einzelschlitz 10mm L1m, Edelstahl

serial-released

The reproduction, distribution and utilization of this document as well as the communication of its contents to others without express authorization is prohibited. Offenders will be held liable for the payment of damages. All rights reserved in the event of the grant of a patent, utility model or design. Observe copyright by ISO 16016

release date: 2018-06-26 11:17

sheet: 1/1

Solidworks 2017 - DIN A3 - Version 1.6